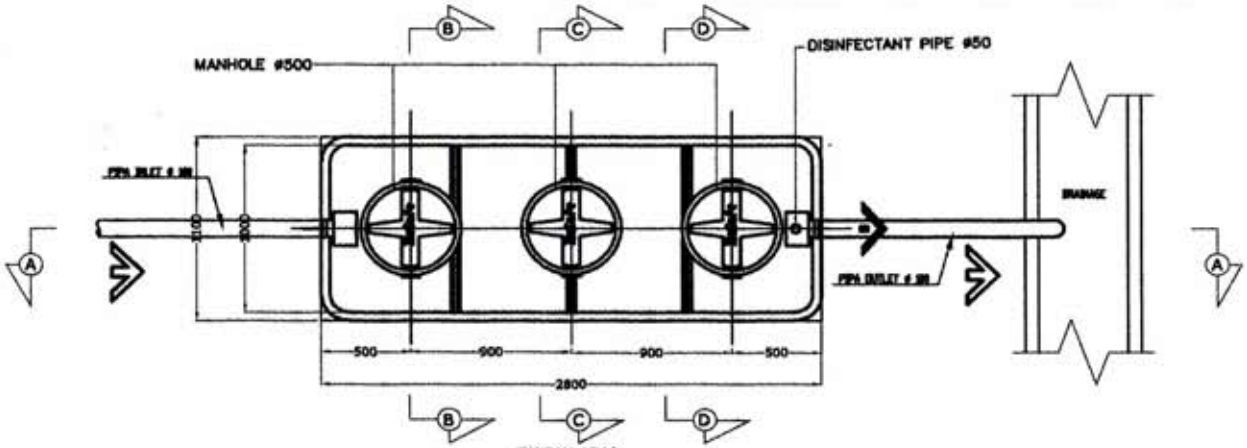

TAMPAK ATAS
NTS

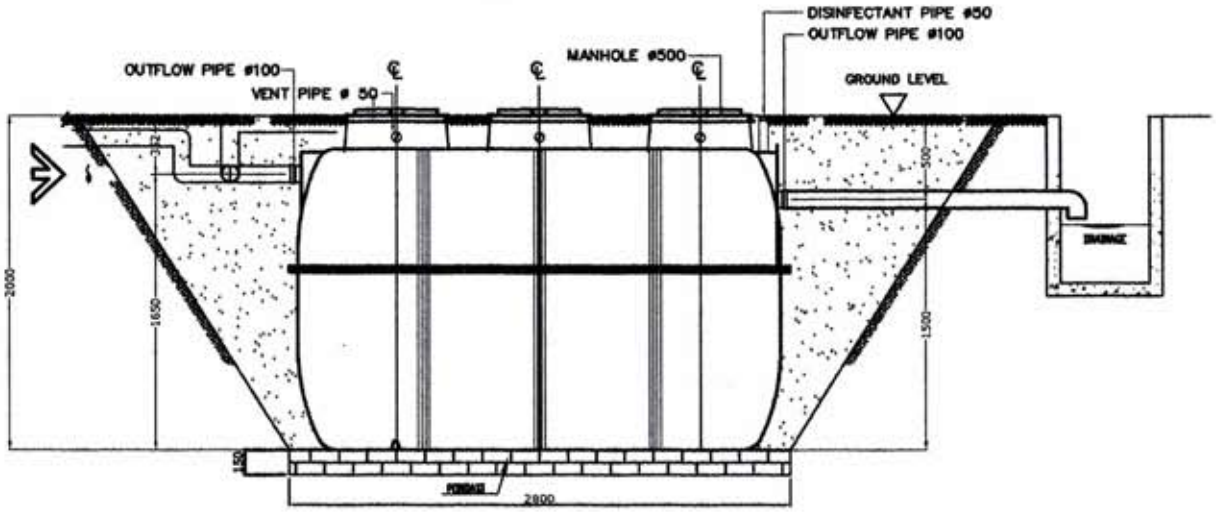

TAMPAK SAMPING
NTS

REV	DESCRIPTION	DRAWN	CHK'D	APPV'D	DATE

REF.DWG.: REV.

WE SERVE AND ENSURE OUR CLIENT WITH THE BEST QUALITY PRODUCT

TITLE : **RC 7**

DRAWN	DESIGNER	APPV'D	REV
DATE	DATE	DATE	
JOB No : 09BMF12	DWG No :		SHT: 1 of 2